SERVICE PARTS LIST

BULLETIN NO. 54-10-4014

SPECIFY CATALOG NO. AND SERIAL NO. WHEN ORDERING PARTS		REVISED BULLETIN	DATE
TWO SPEED HOLE HAWG®		54-10-4013	June 2004
CATALOG NO. 1675-1	STARTING SERIAL NO. 413C	WIRING INSTRUCTION 58-01-0626	

EXAMPLE:
00 — 0
Component Parts (Small #) Are Included When Ordering The Assembly (Large #).

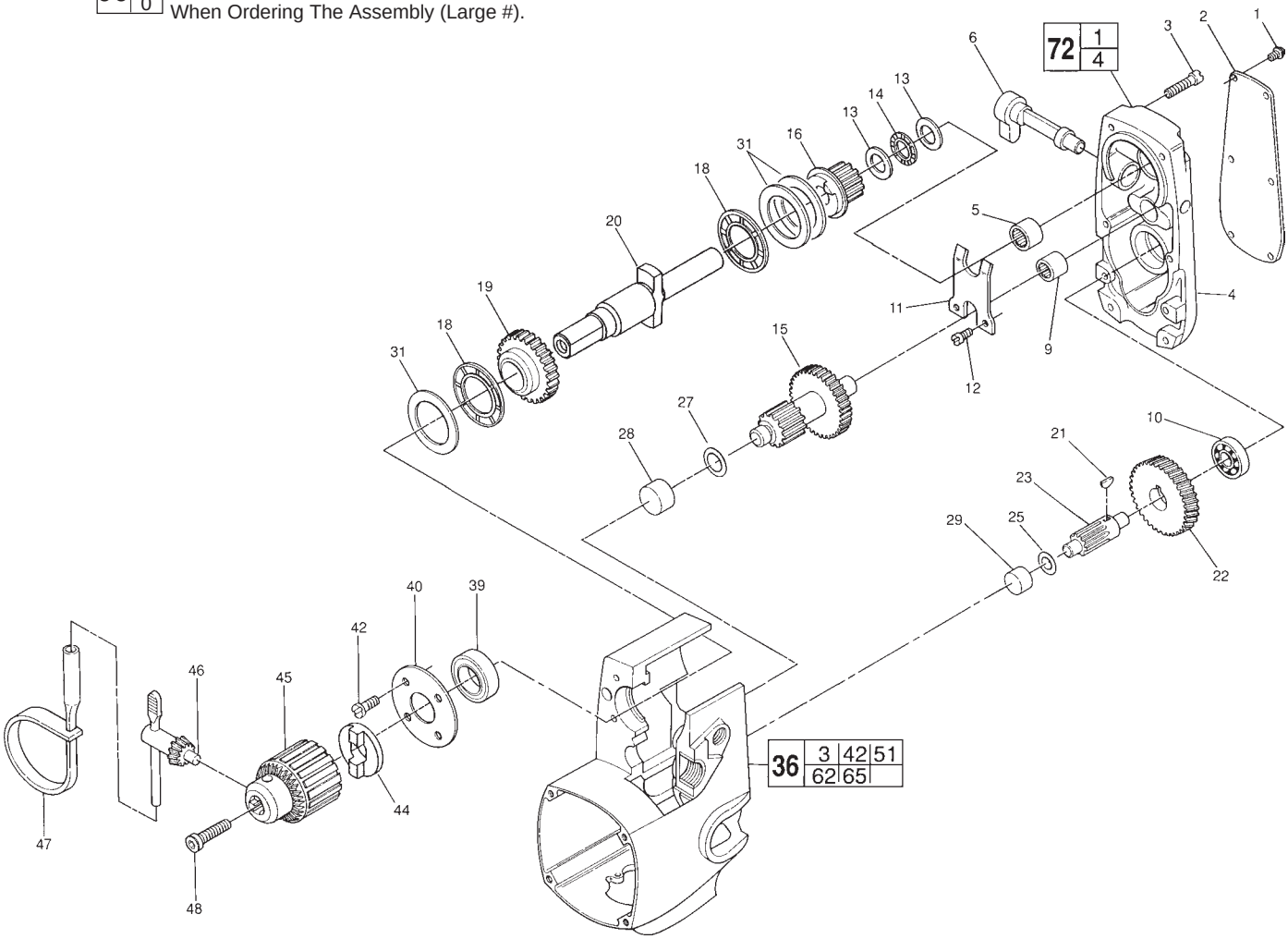

SEE REVERSE SIDE

FIG.	PART NO.	DESCRIPTION OF PART	QTY.
1	06-82-5266	4-40 x 1/4" Pan Hd. T-10 Screw	(6)
2	12-98-7300	Service Nameplate	(1)
3	06-82-5362	8-32 x 1" Pan Hd. T-20 Screw	(6)
4	28-20-1251	Gear Case Cover	(1)
5	02-50-3170	Needle Bearing	(1)
6	31-11-0100	Shifting Cam	(1)
9	02-50-2750	Needle Bearing	(1)
10	02-04-0910	Ball Bearing	(1)
11	45-98-0100	Shifting Yoke	(1)
12	06-82-7252	8-32 x 3/8" Pan Hd. T-20 Screw	(2)
13	45-88-7150	Thrust Washer	(2)
14	02-80-6020	Thrust Bearing	(1)
15	36-66-4530	2nd. Intermediate Pinion and Gear	(1)
16	32-10-0132	Hi-Speed Clutch Gear Assembly	(1)
18	02-80-1800	Thrust Bearing	(2)
19	32-10-0122	Lo-Speed Clutch Gear Assembly	(1)
★ 20	38-50-5000	Spindle	(1)
21	06-42-1200	No. 212 Woodruff Key	(1)
22	32-42-1301	Ist. Intermediate Gear	(1)
23	36-66-4071	Ist. Intermediate Pinion	(1)
25	45-88-7100	Fiber Thrust Washer	(1)
27	45-88-7095	Fiber Thrust Washer	(1)
28	02-50-3180	Needle Bearing	(1)
29	02-50-2020	Needle Bearing	(1)

FIG.	PART NO.	DESCRIPTION OF PART	QTY.
31	45-88-0520	Thrust Washer	(3)
36	28-50-6129	Motor Housing Assembly	(1)
37	44-70-0160	Shifting Plunger	(2)
38	40-50-7670	Shifting Spring	(2)
39	02-04-1700	Ball Bearing	(1)
40	44-66-5241	Bearing Retainer Plate	(1)
42	06-82-7252	8-32 x 3/8" Pan Hd. T-20 Screw	(4)
★ 44	43-78-0670	Drive Hub	(1)
★ 45	48-66-1481	Chuck	(1)
46	48-66-3280	Chuck Key	(1)
47	48-66-4040	Key Holder	(1)
★ 48	06-75-3155	1/4-20 x 1" L.H. Soc. Hd. Cap Screw	(1)
72	28-20-1126	Gear Case Cover Assembly	(1)

FIG. NOTES
48 Torque to 150-155 in./lbs.

FIG. LUBRICATION
4 3-1/2 oz. Type "E" Grease, No. 49-08-4122.
Prelube all needle bearings with Type "E" Grease, No. 49-08-4122.

MILWAUKEE ELECTRIC TOOL CORPORATION
13135 W. LISBON RD., BROOKFIELD, WI 53005

Drwg. 1

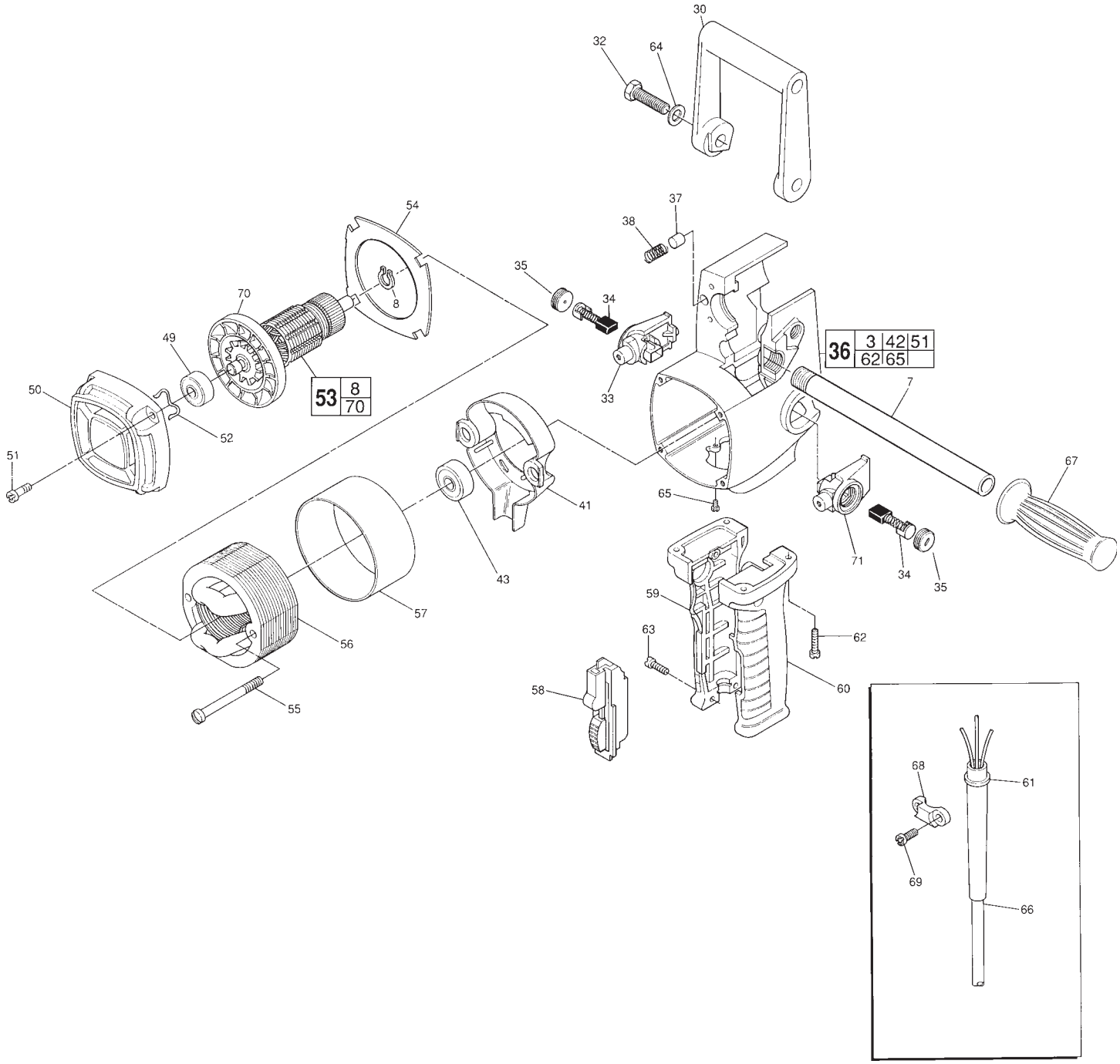

FIG.	PART NO.	DESCRIPTION OF PART	QTY.
7	43-62-0122	Pipe Handle	(1)
8	34-60-0827	Retaining Ring	(1)
30	31-44-1100	Spade Handle	(1)
32	06-75-0500	3/8-16 x 1" Hex Hd. Spade Handle Screw	(2)
33	22-22-1350	R. H. Brush Holder Assembly	(1)
34	22-18-0670	Carbon Brush Assembly	(2)
35	23-44-0220	Brush Retaining Cap	(2)
36	28-50-6129	Motor Housing Assembly	(1)
41	31-55-0065	Coil Shield	(1)
43	02-04-1050	Ball Bearing	(1)
49	02-04-0913	Ball Bearing	(1)
50	28-50-6235	Bearing Support Housing	(1)
51	06-82-5346	8-32 x 3/4" Pan Hd. T-20 Screw	(4)
52	45-88-7110	Spring Washer	(1)
53	16-50-1076	Armature Assembly	(1)
54	42-14-0150	Baffle	(1)
55	06-82-7410	8-16 x 1-7/8" Pan Hd. Plastite T-20 Screw	(2)
56	18-50-0076	Field Assembly	(1)
57	23-16-0425	Field Insulator	(1)
58	23-66-1020	Switch	(1)

FIG.	PART NO.	DESCRIPTION OF PART	QTY.
59	31-44-1441	R.H. Drill Handle	(1)
60	31-44-1446	L.H. Drill Handle	(1)
61	44-76-0150	Cord Protector	(1)
62	06-82-5382	1/4-20 x 3/4" Pan Hd. Taptite T-27 Screw	(4)
63	06-82-7326	8-16 x 1" Pan Hd. Plastite T-20 Screw	(3)
64	45-88-0605	Flat Washer	(2)
65	06-95-5150	6-32 x 1/4" Ground Screw	(1)
66	22-64-0121	Cord Set	(1)
67	43-62-0246	Handle Grip	(1)
68	31-17-0155	Cord Clamp	(1)
69	06-82-7270	8-16 x 5/8" Pan Hd. Slt. T-20 Plastite	(2)
70	22-84-0660	Fan	(1)
71	22-22-1355	L.H. Brush Holder Assembly	(1)
	10-98-5986	Caution Label	(1)